ECR	LET	DESCRIPTION	BY	DATE

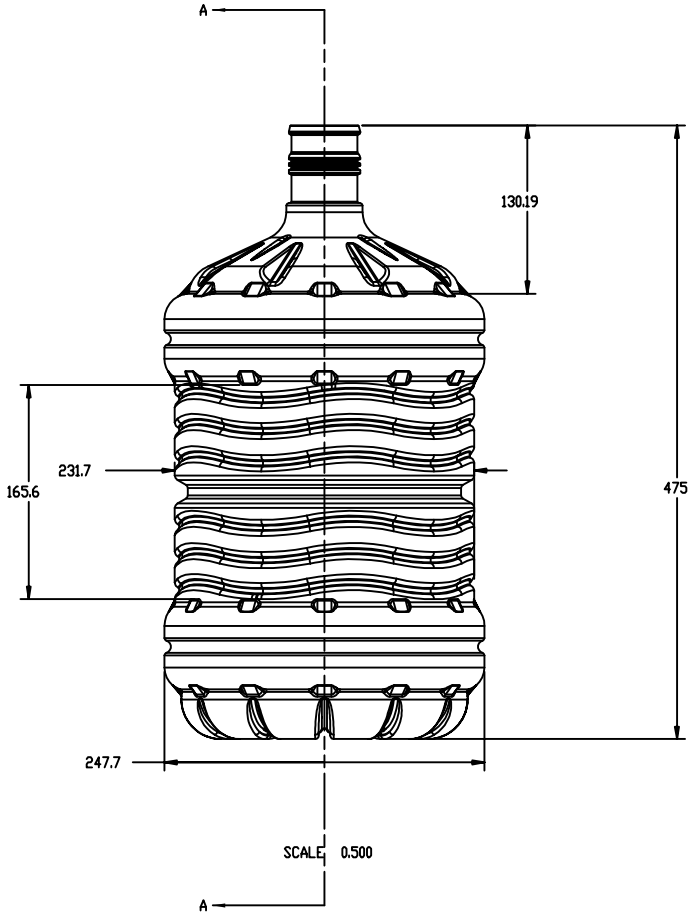

SCALE 0.500

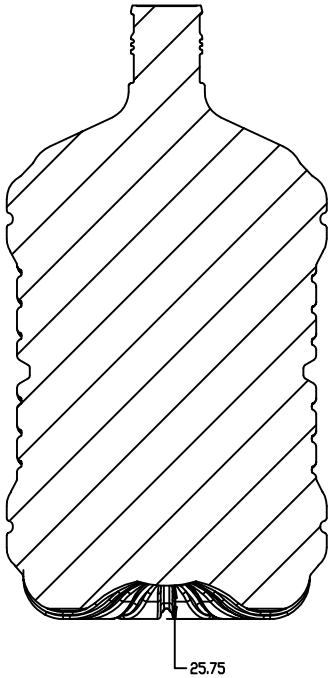

SECTION A-A

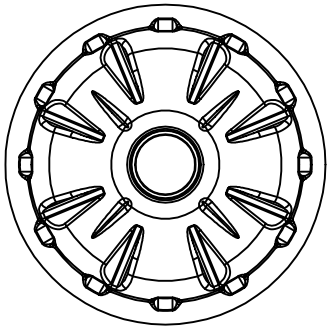

SCALE 0.500

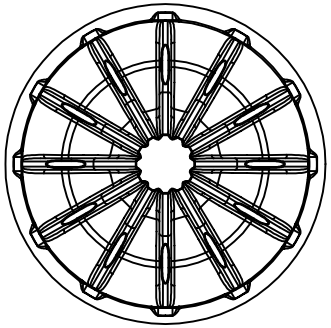

ENGINEERING SKETCH

This drawing is for conceptual purpo ses only!
The dimensions shown are sub,ject to change.
DO NOT use this drawing for tooling fabrica tion.
THIS DRAWING IS NO LONGER A CONTROLL ED DOCUMENT!
DO NOT assume that this is the current draw ing.
Contact DevTech Labs, Inc., 12 Howe Drive,
Anherst, NH. 03031 Phone (603) 889-8311 to confirm.

CUSTOMER		DESIGNER DENNIS CONNOR	DATE 07-FEB-05	DevTech Labs, Inc.
TOTAL MASS (g)	OVERFLOW CAPACITY	CHECKED	DATE	
FINISH MASS (g)	TOTAL MATERIAL VOLUME (cc)	REVISION	TITLE 4-GALLON BOTTLE DESIGN	
PREFORM DWG.		DRAWING TYPE ARTICLE		
FINISH DWG.	SCALE 1:2		DWG NO. D-0565BD020	SHT. 1 OF 1

CAUTION : REPRODUCTIONS OF THIS DRAWING MAY BE REDUCED IN SIZE