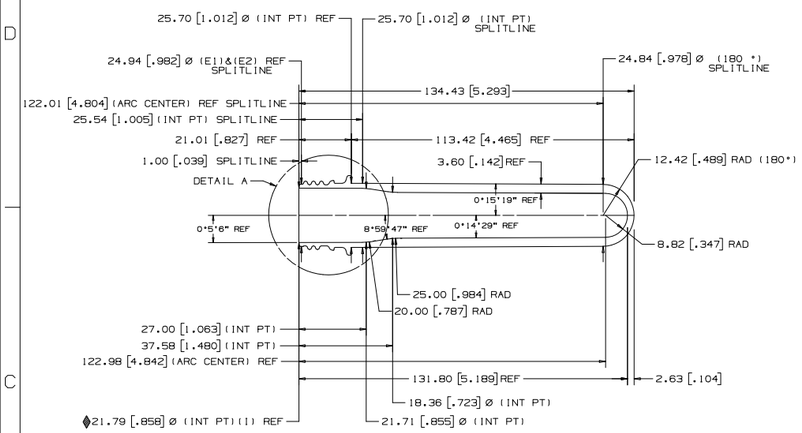

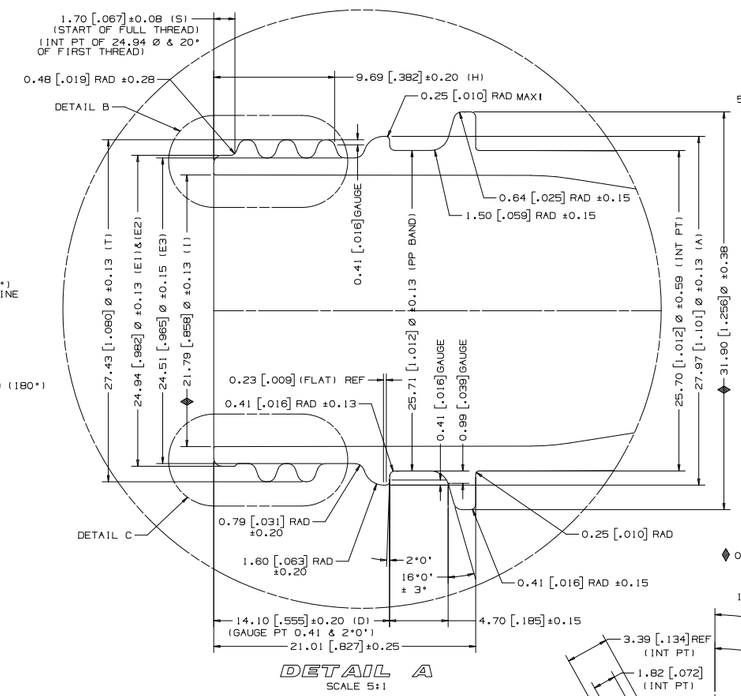

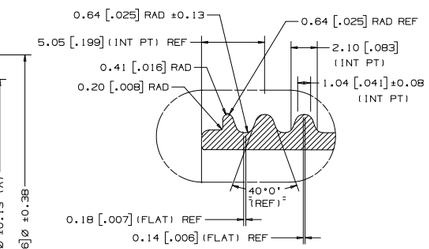

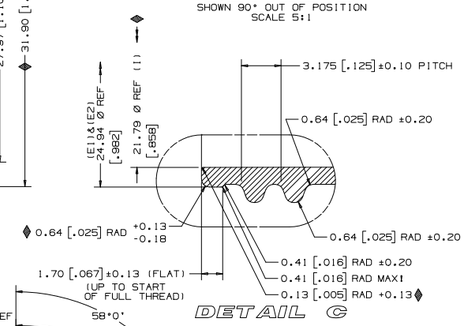

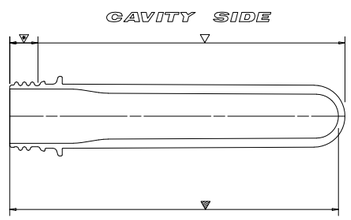

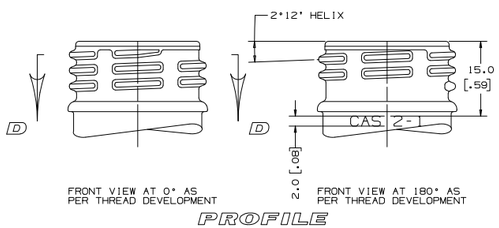

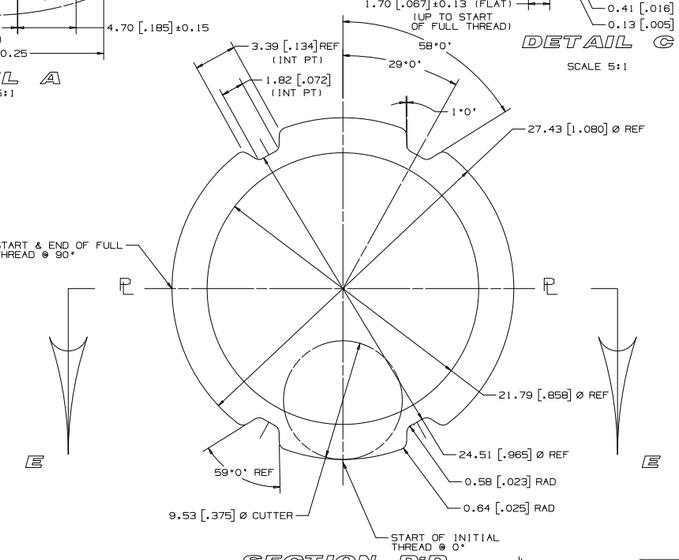

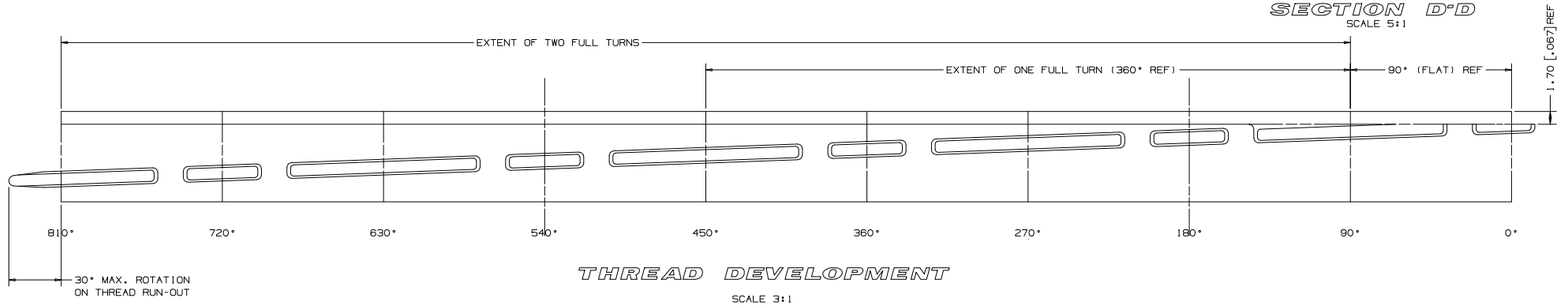

REV.	DATE	DESCRIPTION	BY

◆ DEVIATES FROM 1810-000

SIMILAR TO 1700007-5

103207	CAS 2-1 THRU CAS 2-51 (INCLUDING SPARES)
HUSKY JOB No.	ENGRAVING SEQUENCE

MOLDING SURFACE ENGRAVING DATA:

POSITION: AS SHOWN ON MOLDING SURFACE
STYLE: GORTON NEGATIVE
SIZE: 2.00 HIGH X 0.13 DEEP
NOTE: xxx

CUSTOMER APPROVAL	PLEASE PRINT NAME SIGNATURE
DATE	

CUSOMER AGREES TO IDEMIFY AND SAVE HUSKY, ITS AGENTS AND ALL EMPLOYEES HARLESS FROM ANY AND ALL LOSSES, CLAIMS, ACTIONS, COSTS, EXPENSES, JUDGEMENTS, SUBROGATION, AND OTHER DAMAGES RESULTING FROM INJURY TO ANY PERSON INCLUDING INJURY RESULTING IN DEATH, OR DAMAGE (INCLUDING LOSS OR DESTRUCTION) TO PROPERTY OF WHATSOEVER NATURE OF ANY PERSON ARISING OUT OF OR FROM THE USE OF THIS PRODUCT.
CUSTOMER AGREES TO IDEMNIFY HUSKY AGAINST ALL LIABILITY, COSTS, AND EXPENSES ARISING OUT OF CLAIMS THAT THIS DESIGN INFRINGES THE INTELLECTUAL PROPERTY OF ANY THIRD PARTY.

THIS PRODUCT DRAWING WAS PREPARED BY HUSKY, FROM INFORMATION SUPPLIED BY THE CUSTOMER, FOR THE MANUFACTURE OF MOLDS AND/OR TOOLING AS ORDERED BY THIS CUSTOMER. THIS DRAWING IS NOT TO BE RELEASED TO THIRD PARTIES WITHOUT THE EXPRESS WRITTEN PERMISSION OF THE CUSTOMER.

DIMENSIONS SHOWN ON THIS DRAWING ARE PLASTIC SIZES.

© 1997 HUSKY INJECTION MOLDING SYSTEMS LTD. ALL RIGHTS RESERVED.

PRODUCT DATA

ESTIMATED SHRINKAGE	HUSKY STANDARD
ESTIMATED PART WEIGHT	39.68 ±0.50 g (HUSKY EST)
SPECIFIC GRAVITY	1.335
COMPONENT VOLUME	1.0 LITER
THREAD DRAWING NO.	969-1810-000

MATERIAL: PET

ISO METHOD A — THIRD ANGLE PROJECTION — METRIC — DIMENSIONS ARE IN MILLIMETERS

PART NO. 1172996-0
DESCRIPTION: PLASTIC PART PCO 1-1810
DRAWINGS: PLOT
VIEWS: TOP,INDEX
LAYOUTS: L1(TOP),INDEX(INDEX)

LAYER
1 LAYER INDEX
10 BORDER
11 TITLE BLOCK BLANKS
12 TITLE BLOCK ENTRIES
13
14
15 ALL GEOMETRY
16 DIMENSIONS

MOLD DIVISION	
PROJ. ENG.	
DES. GRP.	PREFORM
DRAWN	M. HOWLETT
CHECKED	--
DATE	97/12/22

HUSKY — Husky Injection Molding Systems Ltd. 530 Queen Street S. Bolton Ontario Canada L7E 5S5

DESCRIPTION: PREFORM DRAWING PLASTIC SIZES 1.0 LITER HUSKY PCO-1 THREAD FORM PCO 969-1810-000

SCALE 1:1 / 5:1
PROJECT NUMBER
ITEM NUMBER 1172996-0
SHEET OF